NREL High Pressure Low Temperature Electrolysis (HPLTE) Flow Field

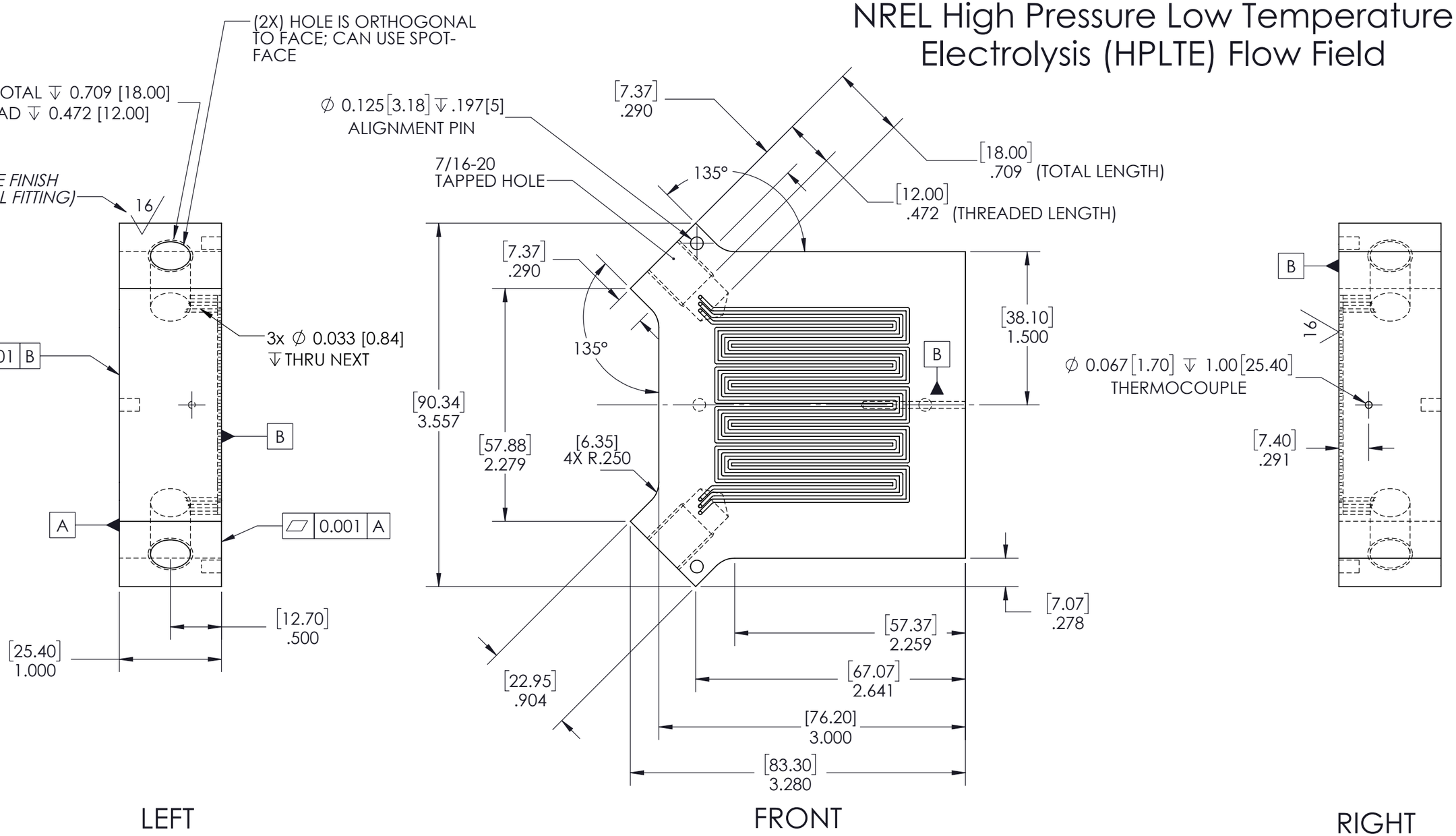

MATERIAL: ASTM GRADE 2 TITANIUM COATED WITH Pt (ANODE) / Au (CATHODE)

TOLERANCE UNLESS OTHERWISE SPECIFIED			
FRACTION	± 1/32	DRN	J WRUBEL 2023-04-27
2 PLACE	± .010	CHK.	
3 PLACE	± .005	APR.	-
4 PLACE	± .0005	DIMENSIONS ARE INCHES [METRIC IN SQUARE BRACKETS]	
ANGLES	± 0° - 30'		
WELDMENTS	± 1/8		
MACHINED FINISHES	64 √		

National Renewable Energy Laboratory
15013 Denver West Parkway, Golden, Colorado 80401
303 384 6375

TITLE: 25cm2 HIGH PRESSURE HARDWARE

DWG.NO. 5900-00-01 REV. 3

SCALE 1:1 SHT 1 OF 3

REV	DESCRIPTION	DATE	BY	APPD	ECO #
-	-	-	-	-	-

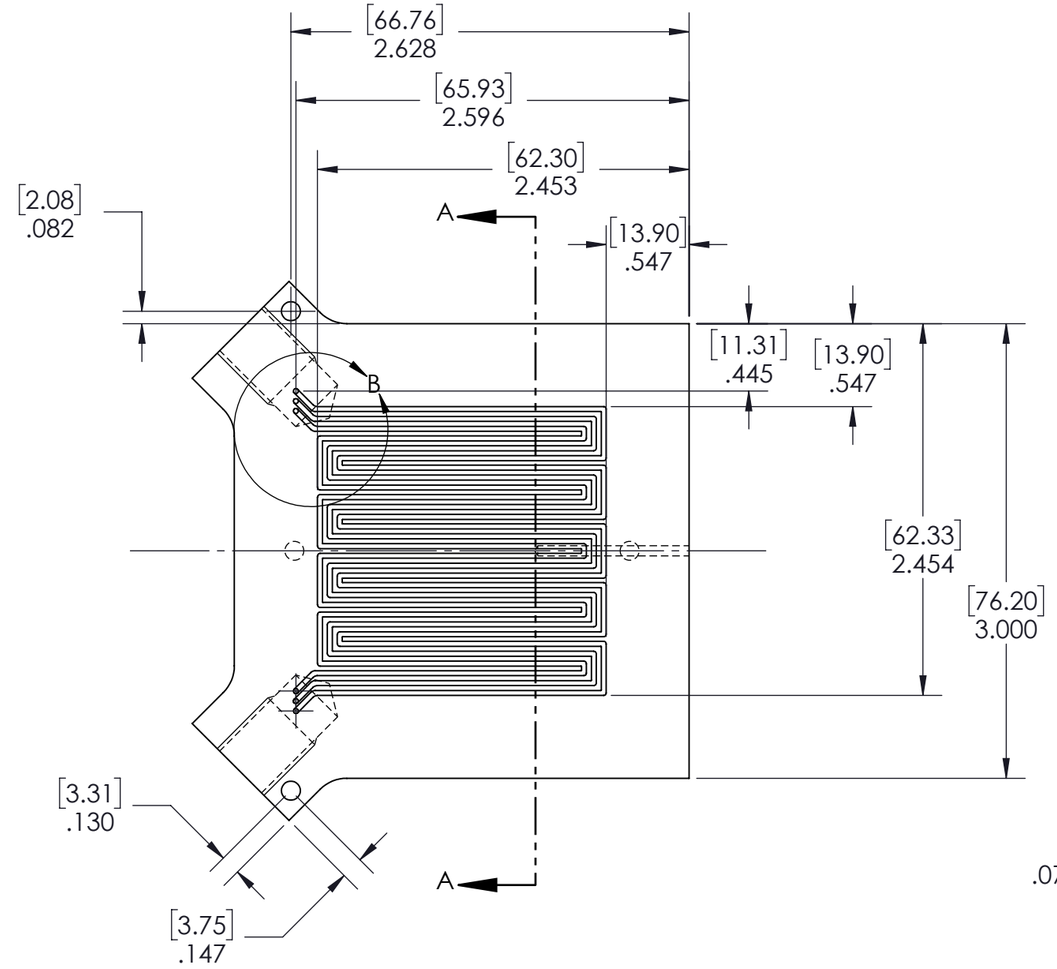

FRONT

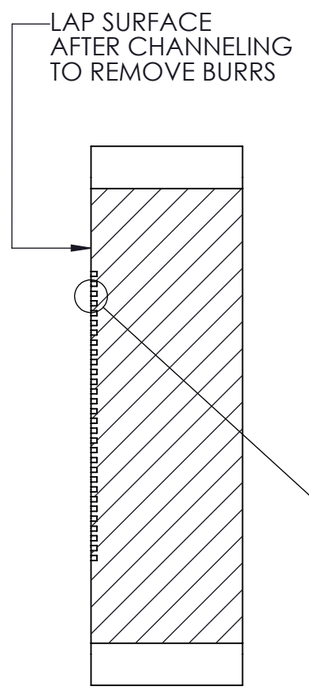

SECTION A-A

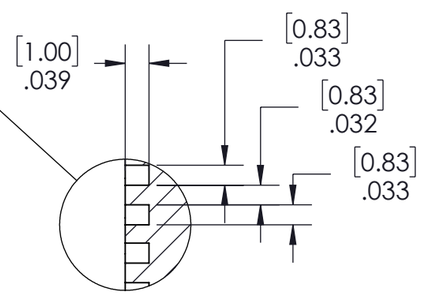

DETAIL A
SCALE 4 : 1

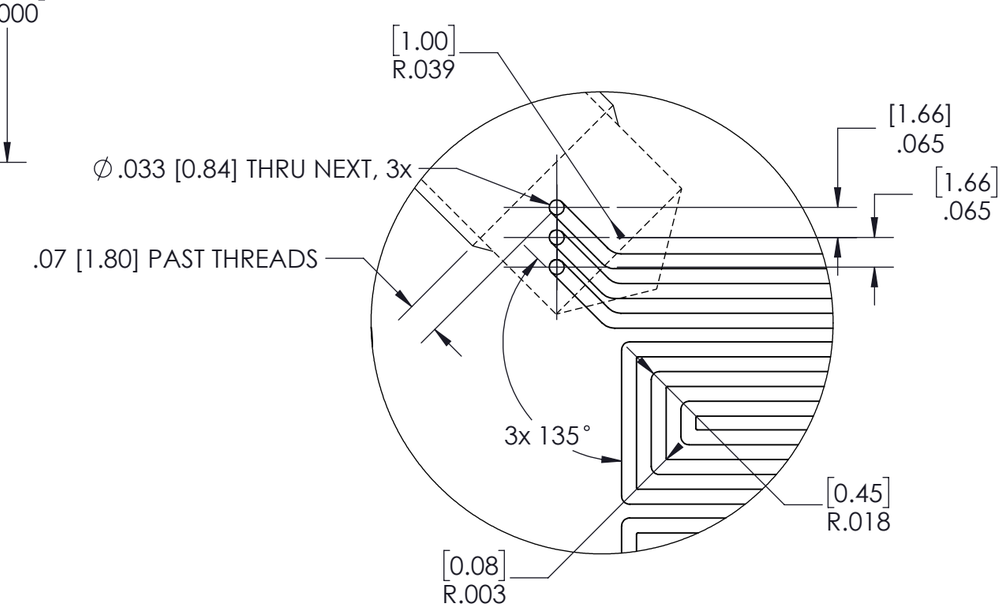

DETAIL B
SCALE 3 : 1

MATERIAL: ASTM GRADE 2 TITANIUM COATED WITH Pt (ANODE) / Au (CATHODE)

TOLERANCE UNLESS OTHERWISE SPECIFIED	DRN J WRUBEL 2023-04-27	National Renewable Energy Laboratory
FRACTION ± 1/32	CHK.	15013 Denver West Parkway, Golden, Colorado 80401
2 PLACE ± .010	APR. -	303 384 6375
3 PLACE ± .005	DIMENSIONS ARE INCHES [METRIC IN SQUARE BRACKETS]	
4 PLACE ± .0005		
ANGLES ± 0° - 30'	TITLE	DWG.NO. 5900-00-01 REV. 3
WELDMENTS ± 1/8	25cm2 HIGH PRESSURE HARDWARE	
MACHINED FINISHES 64 √		SCALE 1:1 SHT 2 OF 3

REV	DESCRIPTION	DATE	BY	APPD	ECO #
-	-	-	-	-	-

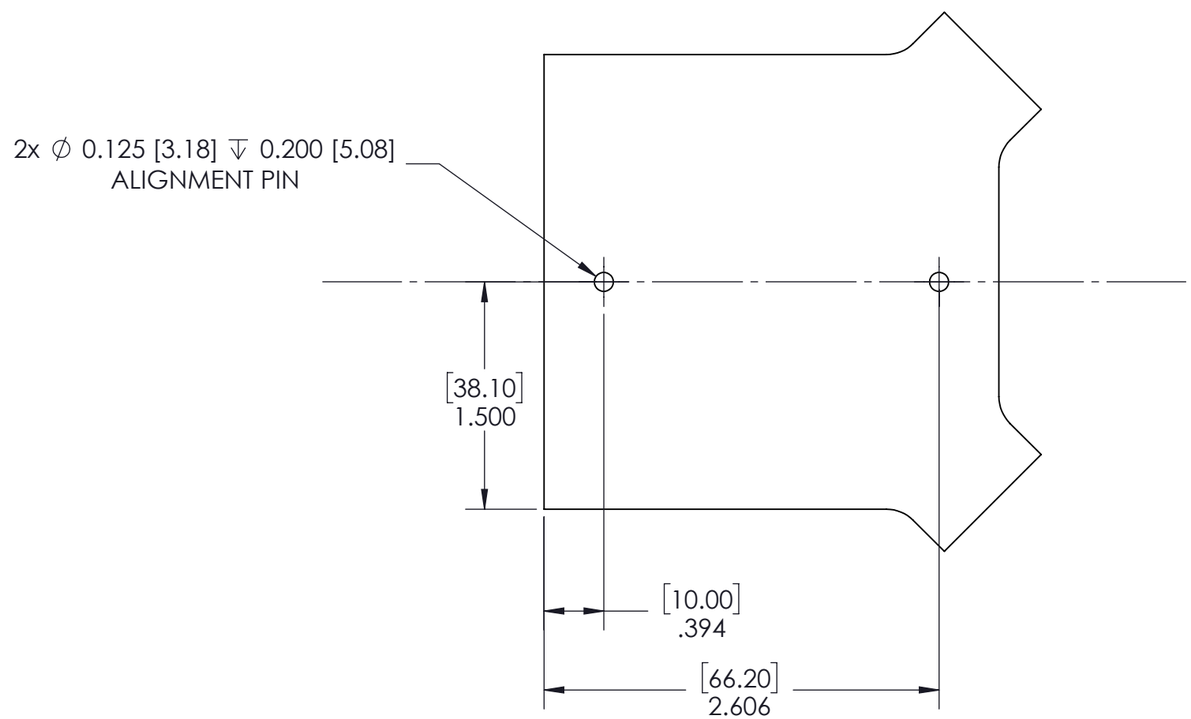

BACK

MATERIAL: ASTM GRADE 2 TITANIUM COATED WITH Pt (ANODE) / Au (CATHODE)

REV	DESCRIPTION	DATE	BY	APPD	ECO #
-	-	-	-	-	-

TOLERANCE UNLESS OTHERWISE SPECIFIED
FRACTION ± 1/32
2 PLACE ± .010
3 PLACE ± .005
4 PLACE ± .0005
ANGLES ± 0° - 30'
WELDMENTS ± 1/8
MACHINED FINISHES 64 √

DRN	J WRUBEL	2023-04-27
CHK.		
APR.	-	

DIMENSIONS ARE INCHES [METRIC IN SQUARE BRACKETS]

National Renewable Energy Laboratory
15013 Denver West Parkway, Golden, Colorado 80401
303 384 6375

TITLE: 25cm2 HIGH PRESSURE HARDWARE

DWG.NO. 5900-00-01 REV. 3

SCALE 1:1 SHT 3 OF 3